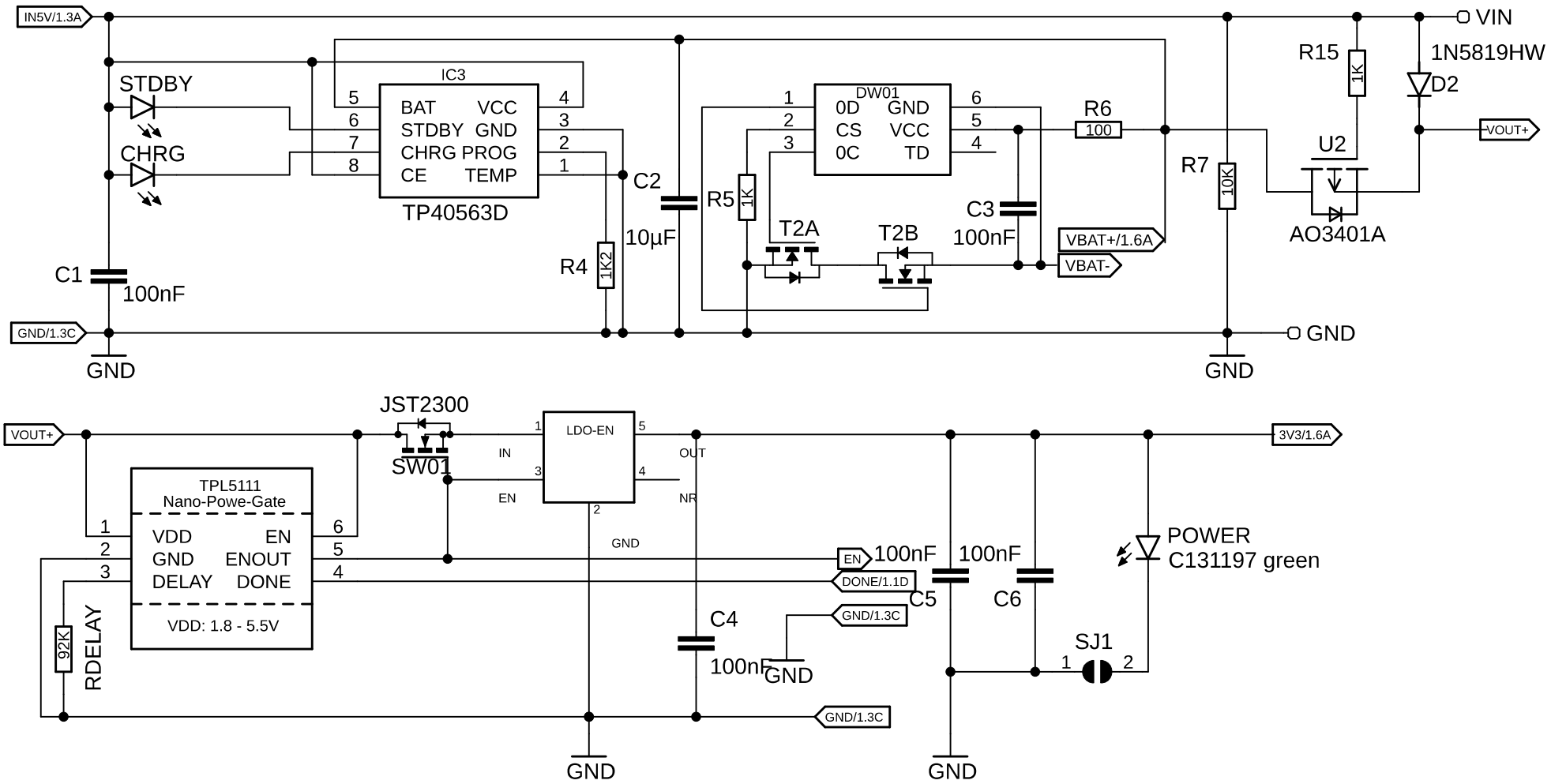

RDELAY Lookup Table
* See the TPL5111 datasheet for full details

100ms = 500 ohm	1s = 5.202K	1m = 22.021K	1h = 124.856K
200ms = 1000 ohm	2s = 6.788K	2m = 29.349K	2h = 170.00K
300ms = 1500 ohm	3s = 7.628K	5m = 42.887K	
400ms = 2000 ohm	4s = 8.306K	10m = 57.437K	
500ms = 2500 ohm	5s = 8.852K	30m = 92.23K	
600ms = 3000 ohm	10s = 11.199K		
700ms = 3500 ohm	30s = 16.778K		
800ms = 4000 ohm			
900ms = 4501 ohm			

Rainer Wieland

ChirpNode-HELTEC-CT62-WS-V02

09.11.2025 21:54

Sheet: 2/2