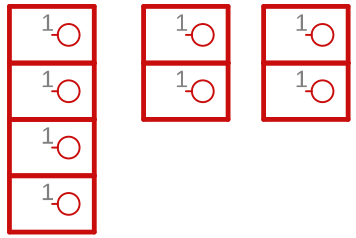

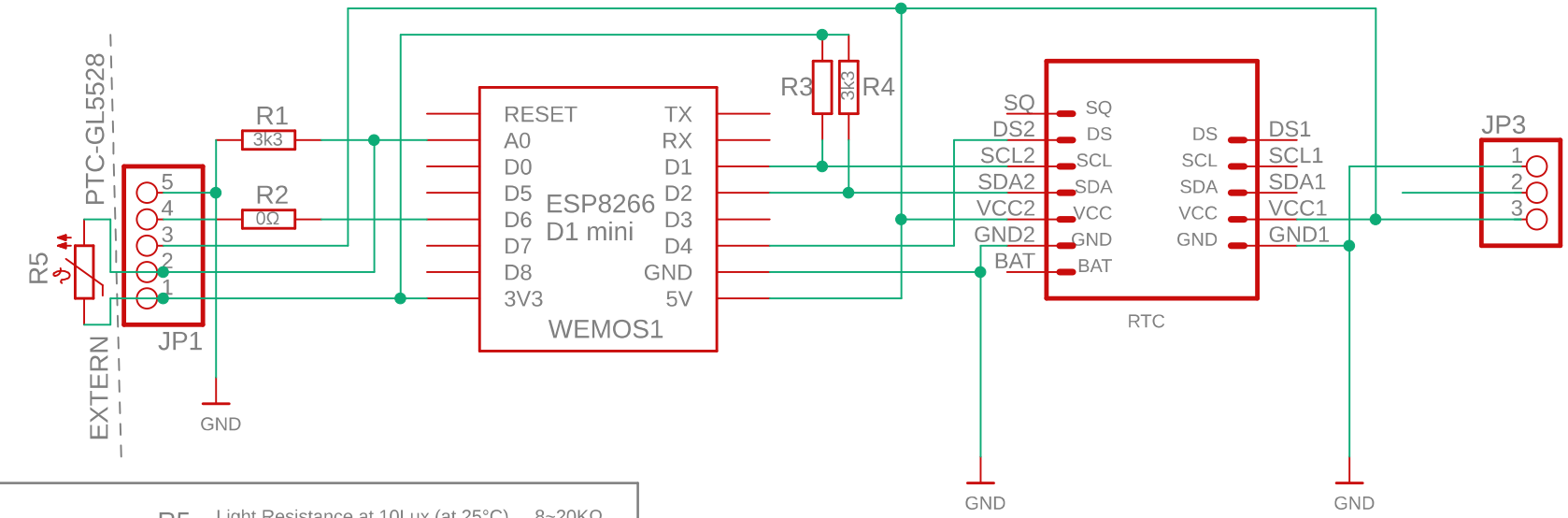

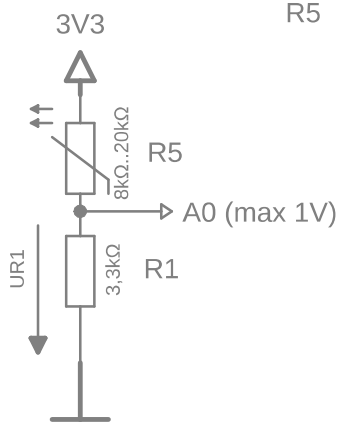

R5

Light Resistance at 10Lux (at 25°C)	8~20KΩ
Dark Resistance at 0 Lux	1.0MO(min)
Gamma value at 100-10 Lux	0.7
Power Dissipation(at 25°C)	100mW
Max Voltage (at 25°C)	150V
Spectral Response peak (at 25°C)	540nm
Ambient Temperature Range:	-30~+70°C

R1 = 3,3kΩ
R5min = 8kΩ .. 20kΩ
R5max = 1MΩ

UR1max = 3,3V * (3,3kΩ/(8kΩ+3,3kΩ)) = 0,964V
UR1max = 3,3V * (3,3kΩ/(20kΩ+3,3kΩ)) = 0,467V
UR1min = 3,3V * (3,3kΩ/(1MΩ+3,3kΩ)) = 0,011V

Rainer Wieland

RGB-Controller-V01

25.01.2026 22:49

Sheet: 1/1